NONLINEAR MODEL | NE6500379A

SCHEMATIC

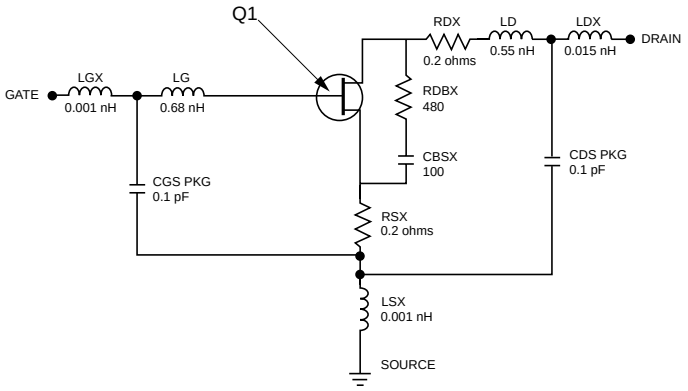

FET NONLINEAR MODEL PARAMETERS (1)

Parameters	Q1	Parameters	Q1
VTO	-2.585	RG	0.2
VTOSC	0	RD	0.001
ALPHA	3	RS	0.001
BETA	1.28	RGMET	0
GAMMA	0	KF	0
GAMMADC(2)	0.035	AF	1
Q	1.7	TNOM	27
DELTA	0.02	XTI	3
VBI	0.6	EG	1.43
IS	1e-14	VTOTC	0
N	1	BETATCE	0
RIS	0	FFE	1
RID	0		
TAU	10e-12		
CDS	0.5e-12		
RDB	0.001		
CBS	0		
CGSO(3)	25e-12		
CGDO(4)	4.5e-12		
DELTA1	1		
DELTA2	0.2		
FC	0.5		
VBR	Infinity		

UNITS

Parameter	Units
capacitance	picofarads
inductance	nanohenries
resistance	ohms

MODEL RANGE

Frequency: 0.4 to 8 GHz
Bias: V_{DS} = 3 V to 8 V, I_D = 300 mA to 500 mA
Date: 6/1/99

(1) Series IV Libra TOM Model
The parameter in Libra corresponds to the parameter in PSpice:

(2)	GAMMADC	GAMMA
(3)	CGSO	CGS
(4)	CGDO	CGD